Specifications

备注(Remark)
1.材料(MATERIAL)
胶芯: PA6T+30%G.F UL94V-0, 颜色:黑色.
Housing:PA6T+30%G.F UL94V-0,Color:Black
端子: 磷铜, 镍底30u"MIN,表面镀金1u"MIN
Contact:Phosphor,1u"MIN GOLD PLATING OVER ALL
30u" MIN NICKEL UNDERPLATING OVER ALL
2.特性 (characteristics):
额定电流: 1 AMP
Raring Current:1 AMP.
接触阻抗: 20 mΩ MAX.
Contact Resistance:20 mΩ MAX.
绝缘阻抗: 1000 MΩ MIN.
Insulating Resistance:1000 MΩ MIN.
耐电压: AC 500V.
Withstanding Voltage:AC 500V.
温度范围: -40°C to+105°C
Temperture Range: -40°C to+105°C

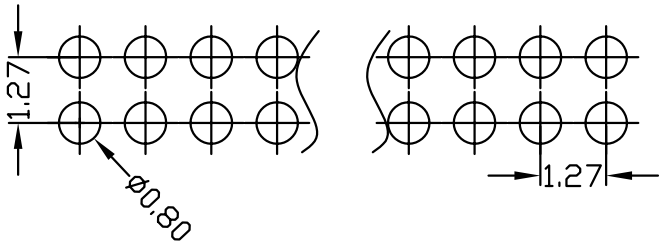

Ordering Information

F344-12 XX XX X SU X 2

NO.OF PINS PER ROW	Contact Plating: Full Of Gold	Contact Plating: Semi-gold	+INSULATOR MATERIAL:	PACKING
2~50P	A0=0.8u"	B0=0.8U"	B:PA6T	A:PE Bag
	A1=1u"	B1=1U"	C:PA9T	B:Tape & Reel
	A2=1.5u"	B2=1.5U"	D:LCP	C:Tube
	A3=2u"	B3=2U"		D:Tube+CAP
	A4=3u"	B4=3U"		E:Tray
	A5=5u"	B5=5U"		
	A6=10u"	B6=10U"		
	A7=15u"	B7=15U"		
	A8=20u"	B8=20U"		
	A9=30u"	B9=30U"		

S1=Ordinary Tin Plated
S2=Matte Tin Plated
S3=Tin-plated High-temperature

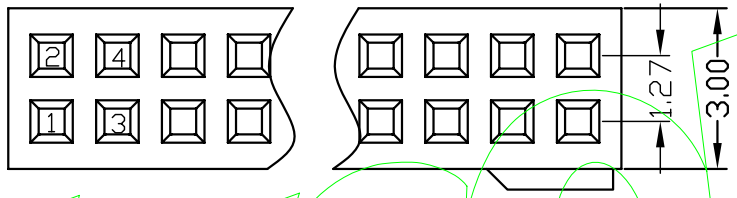

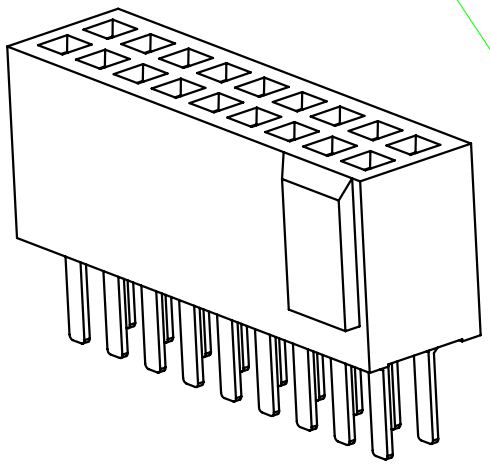

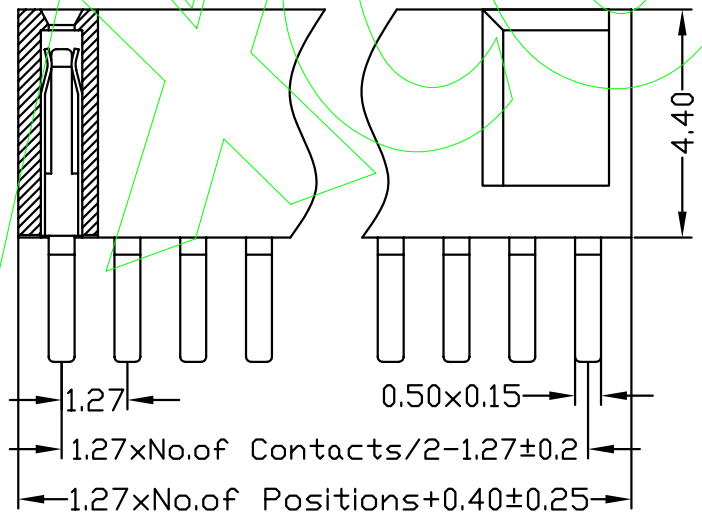

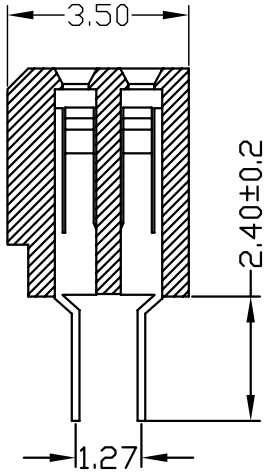

Yxcon

REV	DATE	MODIFICATION DESCRIPTION	CHANGE	APPROVE

OPERATION	
X.X	±0.25
X.XX	±0.20
X.XXX	±0.10
Angle	±3°
DIM	TOL

SCALE	Fit		
UNIT	MM		
SIZE	A4	DESIGN	卢小强
SHEET	1/1	CHECK	
PROJ.		APPROVE	

Yxcon 东莞市宇熙精密连接器有限公司
Dongguan Yuxi Electronic Co.,Ltd.

PART NO.	F344-12XXXXXSUX2
TITLE:	1.27mm双排母 塑高4.4 180度 U型 带防块
Customer No.	